HI 8820
CHDI 8820

Dunstabzugshaube
Afzuigkap
Hotte
Cooker Hood

Montage- und Gebrauchsanweisung
Installatie- en gebruiksaanwijzing
Notice d’utilisation et d’installation
Operating and Installation Instructions

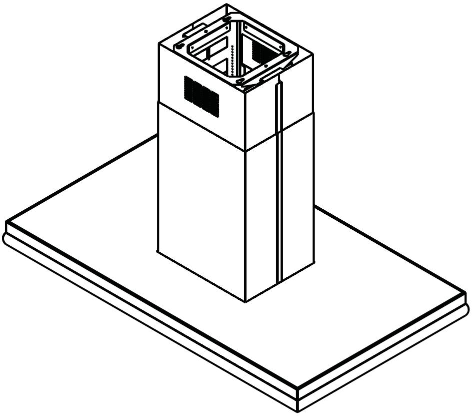

PERFEKT IN FORM UND FUNKTION

Contents

Safety warnings	**62**
For the User	62
For the Installer	62
Description of the Appliance	**64**
Extraction	64
Recirculation	64
Control Panel	**65**
Control device for grease and charcoal filters	66
Grease filter LED (D)	66
Charcoal filter LED (E)	66
Resetting the saturation indicator	66
Maintenance and care	**67**
Cleaning the hood	67
Metal grease filter	67
Removing the metal grease filter	67
Charcoal filter	68
Changing the light bulb	69
What to do if	**70**
Special accessories	**70**
Technical assistance service	**71**
Technical Specifications	**72**
Mounting accessories included	72
Electrical connection	**73**
Safety warnings for the electrician	73
Installation	74

Printed on recycled paper
AEG - putting words into action

⚠ Safety warnings

For the User

- The cooker hood is designed to extract unpleasant odours from the kitchen, it will not extract steam.
- Always cover lighted elements, to prevent excess heat from damaging the appliance. In the case of oil, gas and coal fired cookers it is essential to avoid open flames.
- Also, when frying, keep the deep frying pan on the cooker top/cooker under careful control.
- The hot oil in the frying pan might ignite due to overheating.
- The risk of self-ignition increases when the oil being used is dirty.
- It is extremely important to note that overheating can cause a fire.
- **Never carry out any flambé cooking under the hood.**
- **Always disconnect the unit from the power supply before carrying out any work on the hood, including replacing the light bulb** (take the cartridge fuse out of the fuse holder or switch off the automatic circuit breaker).
- **It is very important to clean the hood and replace the filter at the recommended intervals. Failure to do so could cause grease deposits to build up, resulting in a fire hazard.**
- The appliance is not intended for use by young children or infirm persons without supervision.
- Young children should be supervised to ensure that they do not play with the appliance.
- **WARNING -** Ensure that the appliance is switched off before replacing the lamp to avoid the possibility of electric shock.

For the Installer

- When used as an extractor unit, the hood must be fitted with a 150mm diameter hose.
- Should there already be a pipe with a diameter of 125mm that ducts to the outside through the wall or roof, it is possible to use the 150/125 mm reduction flange provided. In this case the hood will be slightly noisier.
- **When installing the hood, make sure you respect the following minimum distance from the top edge of the cooking hob/ring surfaces:**

electric cookers	**500 mm**
gas cookers	**650 mm**
coal and oil cookers	**700 mm min.**

The hood can be installed above these heights but for optimum performance it should be installed at the distance quoted for the appropriate heat source.

- The national Standard on fuel-burning systems specifies a maximum depression of 0.04 mbar in such rooms.
- The air outlet must not be connected to chimney flues or combustion gas ducts. The air outlet must under no circumstances be connected to ventilation ducts for rooms in which fuel-burning appliances are installed.
- The air outlet installation must comply with the regulations laid down by the relevant authorities.
- When the unit is used in its extractor version, a sufficiently large ventilation hole must be provided, with dimensions that are approximately the same as the outlet hole.
- National and regional building regulations impose a number of restrictions on using hoods and fuel-burning appliances connected to a chimney, such as coal or oil room-heaters and gas fires, in the same room.
- Hoods can only be used safely with appliances connected to a chimney if the room and/or flat (air/environment combination) is ventilated from outside using a suitable ventilation hole approximately 500-600 cm^2 large to avoid the possibility of a depression being created during operation of the hood.
- If you have any doubts, contact the relevant controlling authority or building inspector’s office.
- Since the rule for rooms with fuel burning appliances is “outlet hole of the same size as the ventilation hole”, a hole of 500-600 cm^2, which is to say a larger hole, could reduce the performance of the extractor hood.
- If the hood is used in its filtering function, it will operate simply and safely in the above conditions without the need for any of the aforementioned measures.
- When the hood is used in its extractor function, the following rules must be followed to obtain optimal operation:
  — short and straight outlet hose
  — keep bends in outlet hose to a minimum
  — never install the hoses with an acute angle, they must always follow a gentle curve.
  — keep the hose as large as possible (preferably the same diameter as the outlet hole).
- Failure to observe these basic instructions will drastically reduce the performance and increase the noise levels of the extractor hood.

Description of the Appliance

- The hood is supplied as an extractor unit and can also be used with a filtering function by fitting one charcoal filter.
- You will need an original AEG charcoal filter for this function (Available from your local AEG Service Force Centre).
- **Only for CHDI 8820:** The cooker hood is supplied ready for use as a recirculation hood and may be used for extraction by removing the charcoal filter which has been fitted inside the cooker hood.

Extraction

- In this version fumes are extracted to the outside via a hose connected to the coupling ring **A**. **Fig. 1**.
- In order to obtain the best performance the hose should have a diameter equal to the outlet hole.
- Should there already be a pipe with a diameter of 125mm that ducts to the outside through the wall or roof, it is possible to use the 150/125 mm reduction flange provided. In this case the hood will be slightly noisier.

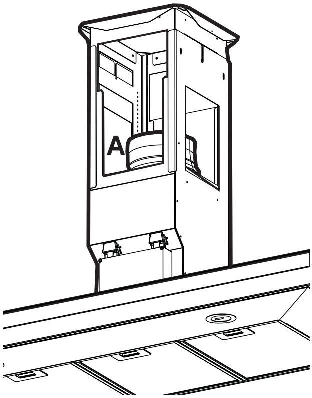

Fig. 1

Recirculation

- The air is filtered through a charcoal filter and returned to the kitchen.
- You will need an original AEG charcoal filter for the filtering function. (See Special Accessories).
- Fix the deflector using 4 screws Ø 3.5x6.5 mm. **Fig. 2**.

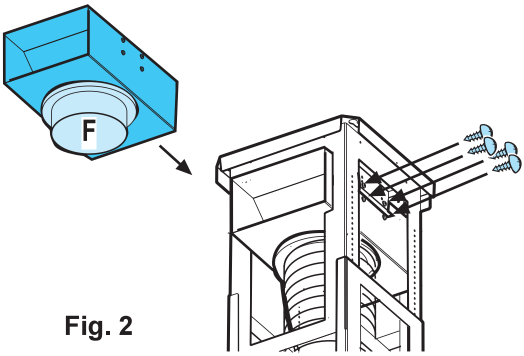

Fig. 2

Control Panel

- Best results are obtained by using a low speed for normal conditions and a high speed when odours are more concentrated.
  Turn the hood on a few minutes before you start cooking, you will then get an under pressure in the kitchen. The hood should be left on after cooking for about 15 minutes or until all the odours have disappeared. The control switches are located on the unit’s front panel.

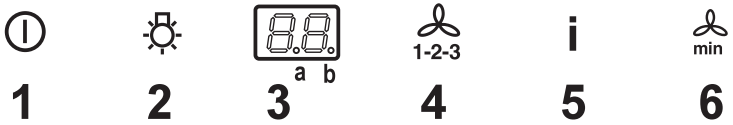

Fig. 3

1 - Mains switch, ON/OFF
Press for less than 1 1/2 seconds and the cooker hood goes into the "stand by" position (point "b" is illuminated).
Press for more than 1 1/2 seconds and the cooker hood turns off, ALL the controls (except the light push button) are disabled (the display is off).
Press again for more than 1 1/2 seconds to reset the cooker hood to "stand by".

2 - Light ON/OFF

3 - Display

4 - Start and choice of motor speed 1-2-3-1-2.........

5 - Intensive speed on/off. The Intensive speed runs for 5 minutes:
If the hood is on when the Intensive speed is activated, the hood will revert to previous speed after 5 minutes.
If the hood is off when the Intensive speed is activated, the hood will automatically turn off after 5 minutes.
To interrupt the Intensive speed, press button **1** or **4**.
The letter **P** appears on the display and the remaining time (the point “**a**” is flashing), if interrupted an acoustic signal is heard.

6 - Self-Timer: times all the speed levels (the point “**b**” is flashing), and then the cooker hood switches off:
The self-timer is set as follows: 1st speed level 20 minutes
2nd speed level 15 minutes
3rd speed level 10 minutes
The display shows the remaining operation time, at the end of the time an acoustic signal is heard. Depressing the push-button again exits the function.

Should the hood or the controls fail to operate: disconnect the power supply for at least 5 seconds. After reconnecting the power supply wait 15 seconds and then check that the cooker hood is now operating
correctly.

Control device for grease and charcoal filters

This hood is fitted with a device that signals when it is necessary to clean the grease filter or the charcoal filter (if the hood is used in the recirculation version with a charcoal filter).
On delivery, the hood is not supplied with a charcoal filter, so the saturation indicator will be disabled.
If the hood is to be used with a charcoal filter, the saturation indicator light must be enabled as follows:
Press buttons **4** and **5** simultaneously and hold them for 3 seconds. At first only the grease filter LED **F** will illuminate, but when the charcoal filter LED **C** illuminates the saturation indicator will be enabled.
To disable it: Press buttons **4** and **5** again simultaneously and hold them for 3 seconds, until the charcoal filter LED **C** goes out.

Grease filter LED (F)

LED **F** will start to flash when it is time to clean the grease filter.
Cleaning will be necessary after 40 working hours. Always comply with the maintenance instructions for the grease filter.

Charcoal filter LED (C)

The charcoal filter LED **C** will start to flash when the charcoal filter needs to be replaced.
This operation is necessary after approximately 160 working hours.

Resetting the saturation indicator

After cleaning or replacing the filters, press button **1** for 3 seconds until the grease filter LED **F** or the charcoal filter LED **C** stops flashing.

Warning! The resetting of the saturation indicator MUST be done in stand-by, never disconnect the hood from the mains.

Maintenance and care

- **The hood must always be disconnected from the electricity supply before beginning any maintenance work.**

Cleaning the hood

- Clean the outside of the hood using a damp cloth and a mild detergent.
- Never use corrosive, abrasive or flammable cleaning products.
- Never insert pointed objects in the motor's protective grid.
- Wash the outside surfaces using a delicate detergent solution. Never use caustic detergents or abrasive brushes or powders.
- Only ever clean the switch panel and filter grille using a damp cloth and delicate detergents.
- It is extremely important to clean the unit and change the filters at the recommended intervals. Failure to do so will cause grease deposits to build up that could constitute a fire hazard.

Metal grease filter

- The purpose of the grease filters is to absorb grease particles which form during cooking and it **must** always be used, either in the external extraction or internal recycling function.
  Attention: the metal grease filters must be removed and washed, either by hand or in the dishwasher, every four weeks.

Removing the metal grease filter

- First, push the metal grease filter stop **(f1)** backwards, then extract the filter **(f2)**, pulling downwards. **Fig. 4**.

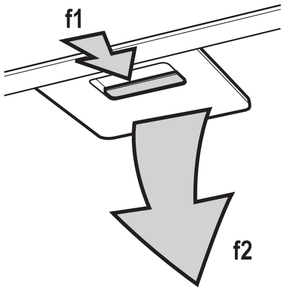

Fig. 4

Hand washing
Soak grease filters for about one hour in hot water with a grease-loosening cleaner, then rinse off thoroughly with hot water. Repeat the process if necessary. Refit the grease filters when they are dry.

Dishwasher
Place grease filters in the dishwasher. Select most powerful washing programme and highest temperature, at least 65°C. Repeat the process.
Refit the grease filters when they are dry.
When washing the metal grease filter in the dishwasher a slight discolouration of the filter can occur, this does not have any impact on its performance.

- Clean the inner housing using a hot detergent solution only (never use caustic detergents, abrasive powders or brushes).

Charcoal filter

- The charcoal filter should only be used if you want to use the hood in the recirculation function.
- To do this you will need an original AEG charcoal filter (available from your local Service Force Centre).
- **Cleaning/replacing the charcoal filter**
  Unlike other charcoal filters, the LONGLIFE charcoal filter can be cleaned and reactivated. At normal use the filter should be cleaned every second month (when using the hood 2,5 hours per day, in avarage). The best way to clean the filter is in the dishwasher. Use normal detergent and choose the highest temperature (65º C). Wash the filter separately so that no food parts gets stuck on the filter and later causes bad odours. To reactivate the charcoal, the filter should be dried in an oven for 10 minutes with a temperature of maximum 100º C.
  After approximately three years of use, the carbon filter should be replaced with a new, as the odour reduction capacity will be reduced.
- **Fitting**
  Remove the frame **i** which supports the filter **h** by turning 90° the two knobs **g.** Insert the charcoal filter inside the frame and put all parts back in their place. **Fig. 5**.
- **To remove** proceed in the reverse order.
- Always specify the hood model code number and serial number when ordering replacement filters. This information is shown on the registration plate located on the inside of the unit.
- The charcoal filter can be ordered from your local AEG Service Force Centre.

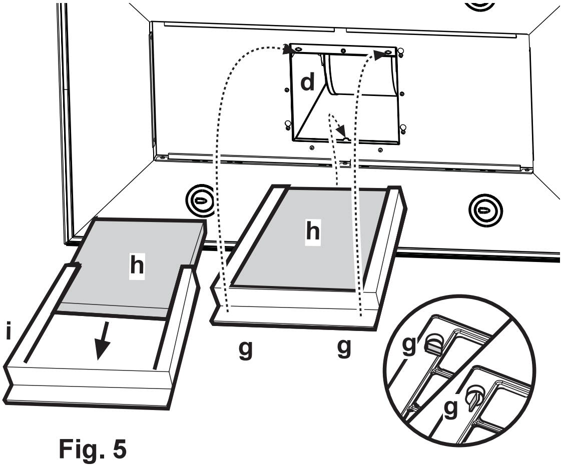

Fig. 5

Warning

- Failure to observe the instructions on cleaning the unit and changing the filters will cause a fire hazard. You are therefore strongly recommended to follow these instructions.
- The manufacturer declines all responsibility for any damage to the motor or any fire damage linked to inappropriate maintenance or failure to observe the above safety recommendations.

Changing the light bulb

- Disconnect the cooker hood from the mains supply.
- Remove the lamp cover, use a screw driver as a lever. **Fig. 6.**
- Replace the old bulb with a new one of the same type.
- Refit the lamp cover.
- If the light does not come on, make sure the bulb has been inserted in correctly before contacting your local AEG Service Force Centre.

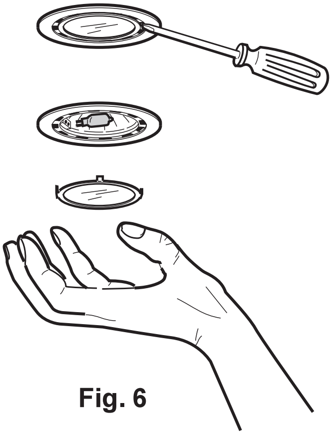

Fig. 6

What to do if

If your appliance fails to work properly please carry out the following checks.

Symptom	Solution
The cooker hood will not start...	Check that: The hood is connected to the electricity supply. Check that a fan speed has been selected
The cooker hood is not working effectively..	Check that: The fan speed is set high enough for the task. The grease filters are clean. The kitchen is adequately vented to allow the entry of fresh air. If set up for recirculation, check that the charcoal filter is still effective. If set up for extraction, check that the ducting and outlets are not blocked.
The cooker hood has switched off during operation...	The safety cut-out device has been tripped. Turn off the hob and then wait for the device to reset. If the hood has been installed below the heights indicated in the installation instructions the motor will cut-out frequently which will damage the hood.

If after all these checks, the problem persists, contact your local Service Force Centre, quoting the model and serial number.
Please note that it will be necessary to provide proof of purchase for any in-guarantee service calls.
In-guarantee customers should ensure that the above checks have been made as the engineer will make a charge if the fault is not a mechanical or electrical breakdown.

Special accessories

Charcoal filter Type 20

Technical assistance service (not for UK)

You are welcome to telephone our technical assistance service (see list of technical assistance centres) whenever you need information or in the unlikely event of a fault.
For service in Australia call 1300 650 020.
When calling, please be ready to specify:

1. **The model code number**
2. **The serial number (E-Nr.)**
3. **The manufacturing number (F-Nr.)**

This information is shown on the registration plate inside the unit behind the grease filter.

We reserve the right to change specifications and colours as a result of our policy of continuing technological development.

Service and spare parts for UK

In the event of your appliance requiring service, or if you wish to purchase spare parts, contact your local AEG Service Force Centre by telephoning: **08705 929 929**

Your call will be automatically routed to the Service Centre covering your post code area. For the address of your local Service Force Centre and further information about Service Force, please visit the website at www.serviceforce.co.uk
Please ensure that you have read the section „What to do if....“ as the engineer will make a charge if the fault is not a mechanical or electrical breakdown even the appliance is under warranty. **Please note that proof of purchase is required for in-guarantee service calls.**

Help us to help you
Please determine your type of enquiry before writing or telephoning.
When you contact us we need to know:

- Your name
- Address and post code
- Telephone number
- Clear and concise details of the fault
- Name and model of the appliance*
- E number*

* This information can be found on the rating plate, which can be seen when the grease filters are removed.

CUSTOMER CARE DEPARTMENT

For general enquiries concerning your AEG appliance or for further information on AEG products, please contact our Customer Care Department by letter or telephone at the address below or visit our website at www.aeg.co.uk

Customer Care Department
AEG
55-77 High Street
Slough, Berkshire
SL1 1DZ
08705 950950 (*)

* calls to this number may be recorded for training purposes.

Technical Specifications

Dimensions:	
Height x Width x Depth (in cm)	81,5-110 x 120 x 70
Maximum absorbed power:	255 W
Motor absorption:	1 x 175 W
Lighting:	4 x20 W
Length of the cable:	150 cm
Electrical connection:	220-240 V

Mounting accessories included

1 Reduction flange Ø 150-125
1 Deflector
6 Wood-screws 6 x 70 mm
6 Wall plugs Ø 10 mm
14 Nuts
4 Metal-screw 3 x 9 mm (2 upper chimney fixing + 2 for chimney brackets)
14 Metal-screw 4 x 8 mm (4 for additional structure fixing + 10 to fix hood to structure)
14 Metal-screw 4 x 7 mm (to fix chimeny sections)
2 Chimney brackets
14 fixing springs

Electrical connection (not for UK)

Safety warnings for the electrician

Before connecting the appliance to the power supply, check that the voltage indicated on the rating plate corresponds to the mains power supply available. Appliances fitted with a plug can be connected to any standard power socket within easy access. Should it be necessary to provide a fixed connection, the hood must only be installed by an electrician authorised by the local electricity board. When installing, an omnipolar disconnector with a distance of at least 3 mm between contacts must be provided.

Fixed connection of the appliance must only be carried out by an authorised electrician.

Electrical connection for UK only

Safety warnings for the electrician

Connect the hood to the mains supply via a double pole switch which has 3 mm minimum separation between the contacts.

The switch must be accessible at all times.

The following is valid in the United Kingdom only:

- the wire which is coloured green and yellow must be connected to the terminal which is marked with the letter E or by the earth symbol (⏚), or coloured green or green and yellow;
- the wire which is coloured blue must be connected to the terminal which is marked with the letter N or coloured black, -
- the wire which is coloured brown must be connected to the terminal which is marked with the letter L or coloured red.

Installation - Fig. 7-8-9-10

Assembling the deflector (3 parts – only for filter version):
The three parts should be fixed with 2 screws, the deflector extension is adjustable and should correspond to the width of the chimney flue support, to which it is then fixed. **Fig. 7**.
Expansion plugs are provided to secure the hood to most types of ceilings. However, a qualified technician must verify suitability of the materials in accordance with the type of ceiling. The ceiling must be strong enough to take the weight of the hood.
During electrical connection ensure the power supply is disconnected at the domestic mains switch.

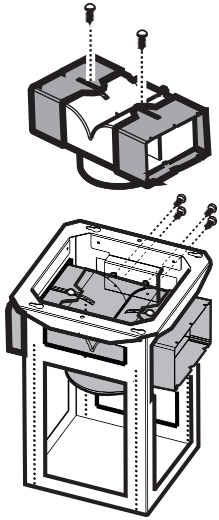

Fig. 7

- Adjust extension of the hood support structure, as the final height of the hood depends on this, and remember that with installation completed the hood must be at least 60 cm above the hob top for electric cookers and 75 cm for gas or mixed fuel cookers.
- Fix the two sections of the structure using 8 screws (2).
- Place the ceiling hole diagram directly above the hob top (3 - the centre of the diagram must match the centre of the hob top and the edges must be parallel to the sides of the hob top – the side of the diagram with the wording FRONT corresponds to the control panel side). Prepare the electrical connection.
- Drill as shown (6 holes for 6 wall plugs – 4 plugs for fixture), screw the outer screws leaving a space of about 1 cm. between the screw head and the ceiling (4).
- Fit an exhaust pipe inside the support (5) and connect it to the motor compartment connection ring (exhaust pipe and fixing brackets are not supplied).
- Hook the frame onto the 4 screws (6 - see also step 4).
  CAUTION! The side of the support with connection box corresponds to the side of the control panel with hood assembled.
- Tighten the 4 screws (7).
- Insert and tighten another 2 screws in the remaining free holes (8) for secure fixing.
- Carry out the electrical connection (9) to the mains power supply, only turn on the power supply upon completion of assembly.
- Hook the hood onto the support (10) , ensuring it fits properly – to hook the hood onto the support partially tighten 4 screws (see also step 12).
- Secure the hood to the support using 6 screws (11); this will also help centre the two sections.
- Tighten the 4 screws securing the support to the hood (12).

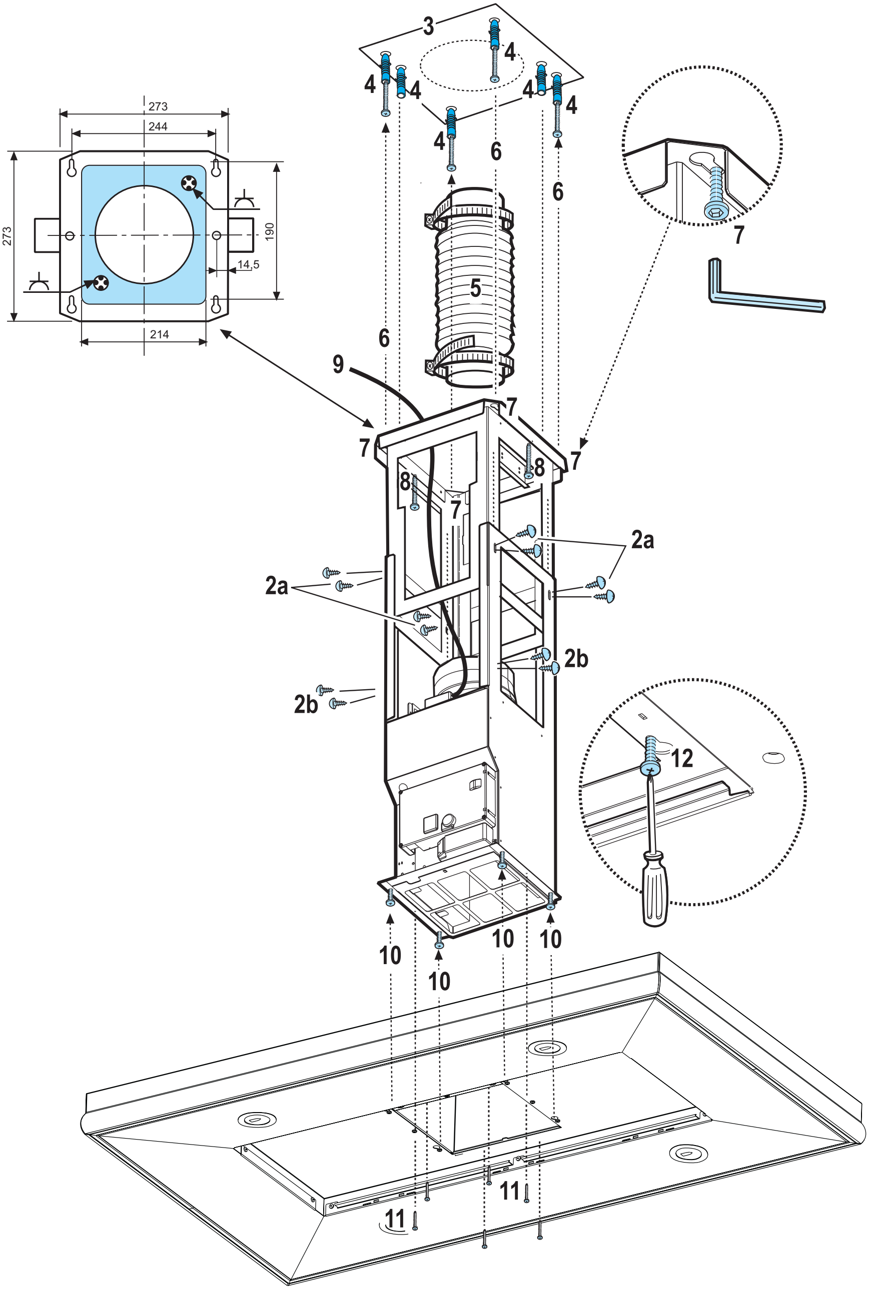

Fig. 8

- For extractor versions (13A), connect the other end of the exhaust pipe to the flue. For filter versions (13F), fit deflector F to the support and secure it to the bracket supplied using 4 screws, then connect the exhaust pipe to the connection ring located on the deflector.
- Fit the nuts with fixing hooks (14) supplied inside the top and bottom sections of the flues at the rectangular slots. A total of 14 nuts must be fitted.
- Fix the two bracket supplied with one screw each (15a)
- Join the two top sections of the flue to cover the support (15b) so that one of the slots on the sections is situated on the same side of the control panel and the other on the opposite side. Screw the two sections together with 8 screws and springs (4 each side- see the plan diagram for joining the two sections - springs must be fixed horizontally).
- Fix the top flue assembly to the support, near the ceiling, with two screws (16 - one each side).
- Carry out electrical connection of control panel and bulbs (17).
- Join the two bottom sections of the flue covering the support (18) using 6 screws and springs (3 each side, see the plan diagram for joining the two sections - springs must be fixed horizontally).
- Insert the bottom section of the flue in its seat so that it completely covers the motor compartment and electrical connection box, then ensure it from inside the hood using two screws (19).
- Apply the 2 tabs (20 - supplied) to cover the fixing points of the bottom flue (CAUTION! THE BOTTOM FLUE TABS ARE THE NARROWER AND SHALLOWER ONES).
  The wider and deeper tabs are those used for the top flue, and must be cut to size.
  If necessary, slightly expand the tabs to ensure their adherence to the flue.
- Turn the mains power on again at the central electrical panel and check for correct hood operation.

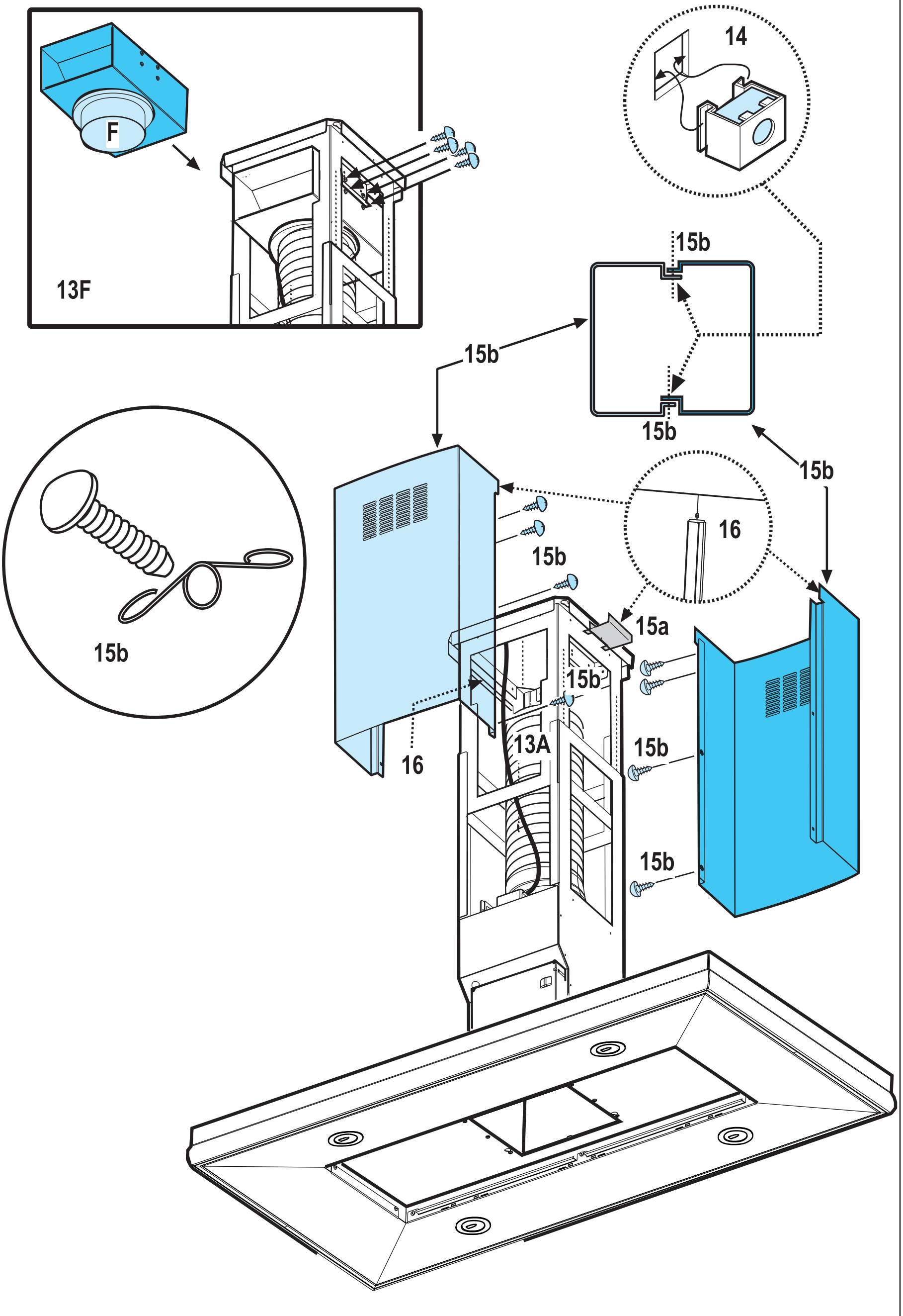

Fig. 9

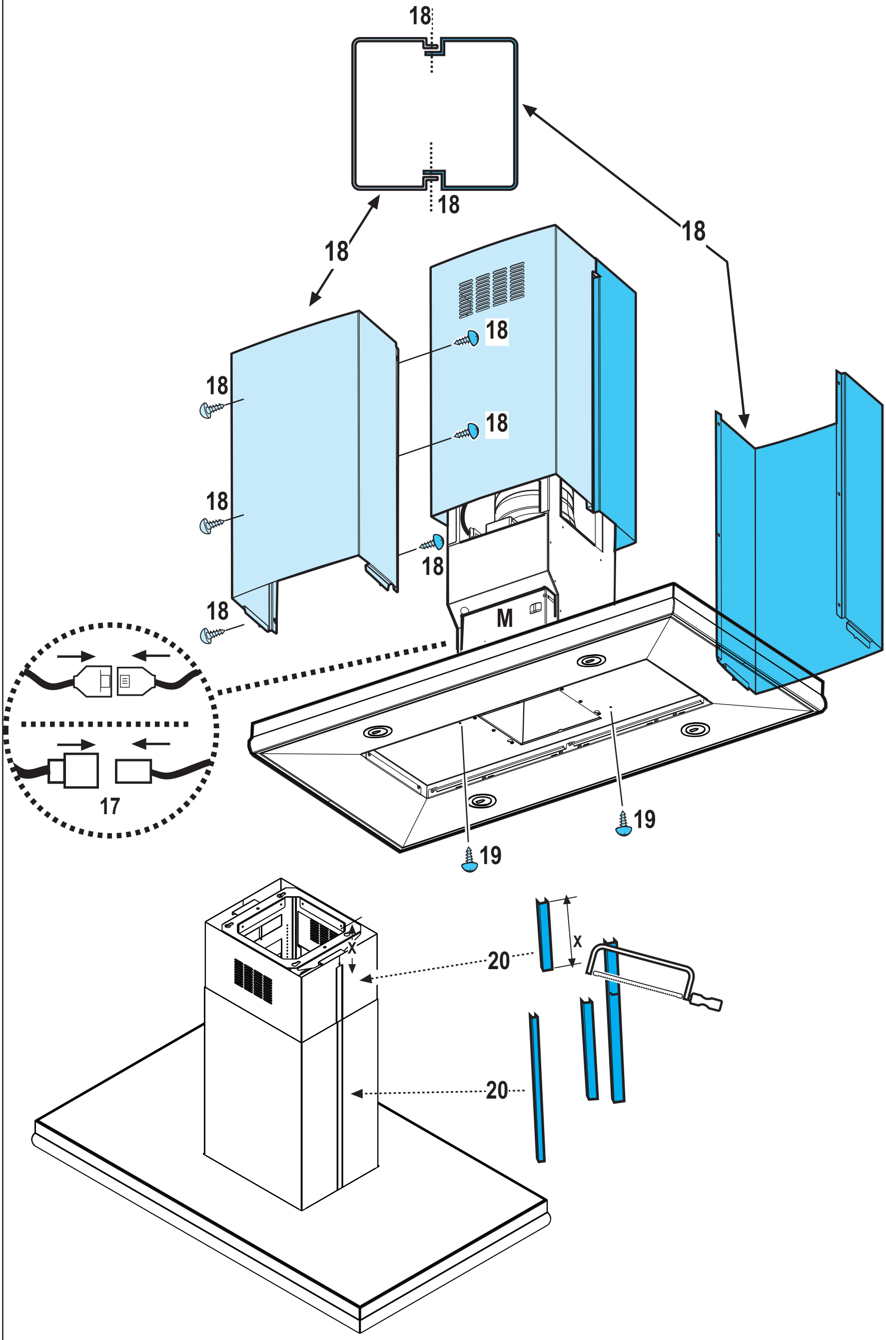

Fig. 10

***From the Electrolux Group.** The world´s No.1 choice.*

The Electrolux Group is the world´s largest producer of powered appliances for kitchen, cleaning and outdoor use. More than 55 million Electrolux Group products (such as refrigerators, cookers, washing machines,vacuum cleaners, chain saws and lawn mowers) are sold each year to a value of approx. USD 14 billion in more than 150 countries around the world.

AEG Hausgeräte GmbH
Postfach 1036
D-90327 Nürnberg

http://www.aeg.hausgeraete.de
http://www.aeg.co.uk

© Copyright by AEG

LI2AZA Ed. 01/04